

G PRO

RENTAL LED CABINET

BY HAWII LED SCREEN PRODUCT



G-PRO
SERIES

Premium Indoor / Outdoor Rental Cabinet

Models : IGP1 / IGP1.5 / IGP2.9 / IGP3 / OGP2 / OGP4



LED Splicing screen

Products are designed with high precision, strength, convenience and color performance standards to meet the needs of various usage environments. The display panel adopts a universal indoor and outdoor design to meet various needs of customers. Support the latest display technologies such as 3D display and HDR. The internal connection of the product adopts the wireless material connection method, which has higher reliability. The fixing buckle prevents the display panel from falling off or loosening during transportation or installation, which is highly secure.

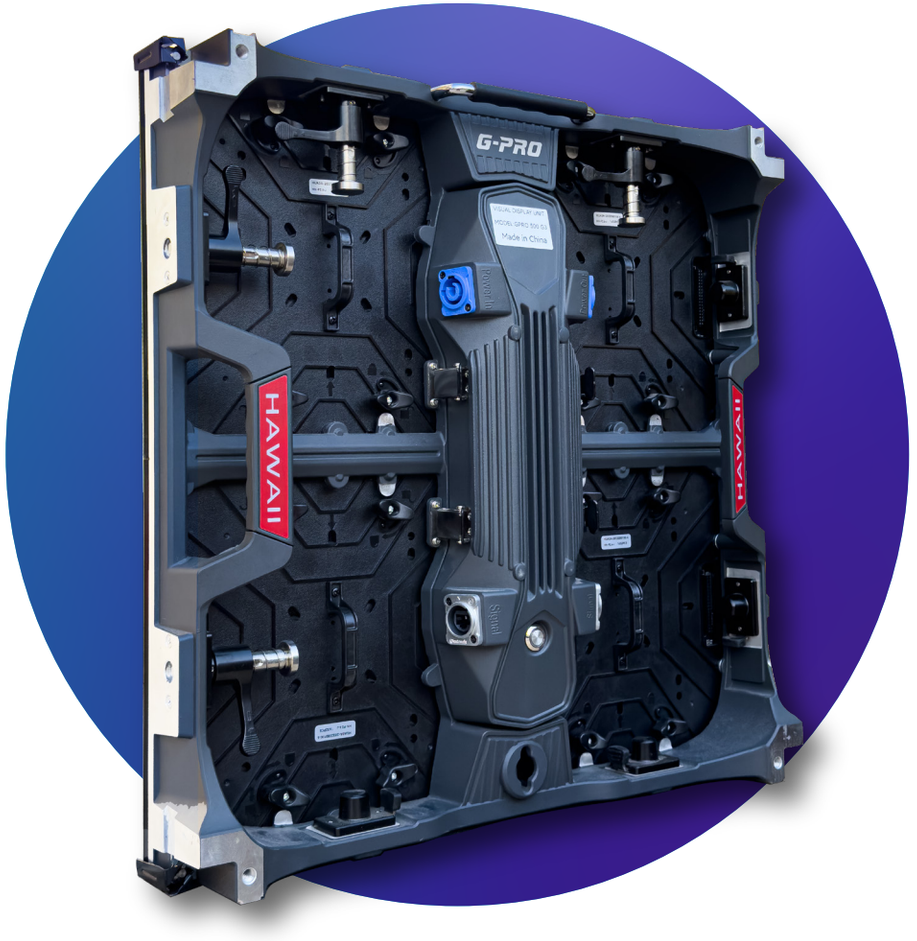

G-PRO
SERIES

INDOOR : IGP1.5/ IGP2.6 / IGP2.9 / IGP3 /
OUTDOOR : OGP2 / OGP4

- 3840Hz
  High refresh rate
- 4000nits
  Maximum brightness
- Edge protection
  Anti-collision design
- One-man installation
  Easy and fast installation
- Modular design
  Front and rear maintenance
- Creative shape
  Concave and convex connection

Lightweight design

The G-pro eries adopts a lightweight design to make the operation easier and labor-saving.

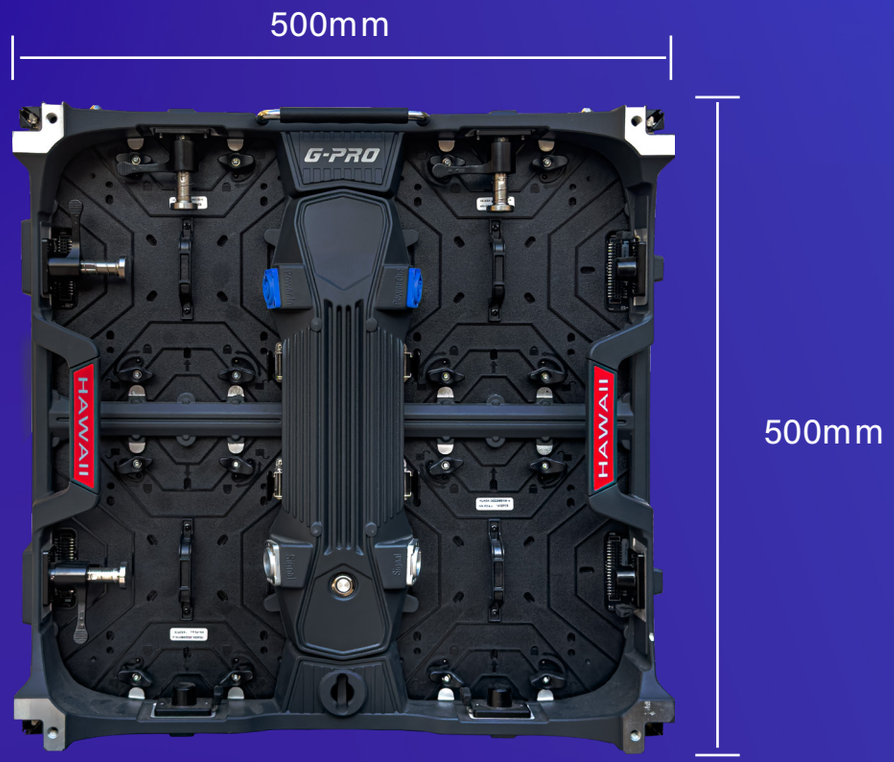

500*500mm indoor panel

≤ 7.5 kg

Panel thickness

80 mm

*GLADOS only provides 500*500mm panel

Amazing visual experience

Superior visual performance with high brightness and high refresh rate, ready to create stunning event moments at any time.



Low refresh rate



3840Hz high refresh rate

Indoor NT2.6 and NT2.9 brightness
1000nits

Outdoor NT3.9W brightness
4000nits

Refresh rate
3840Hz

The G-pro series adopts a platform design so that modules with different pixel pitches can be used on the same frame, which is convenient for customers to flexibly adjust the pixel pitch of the screen and further saves costs.

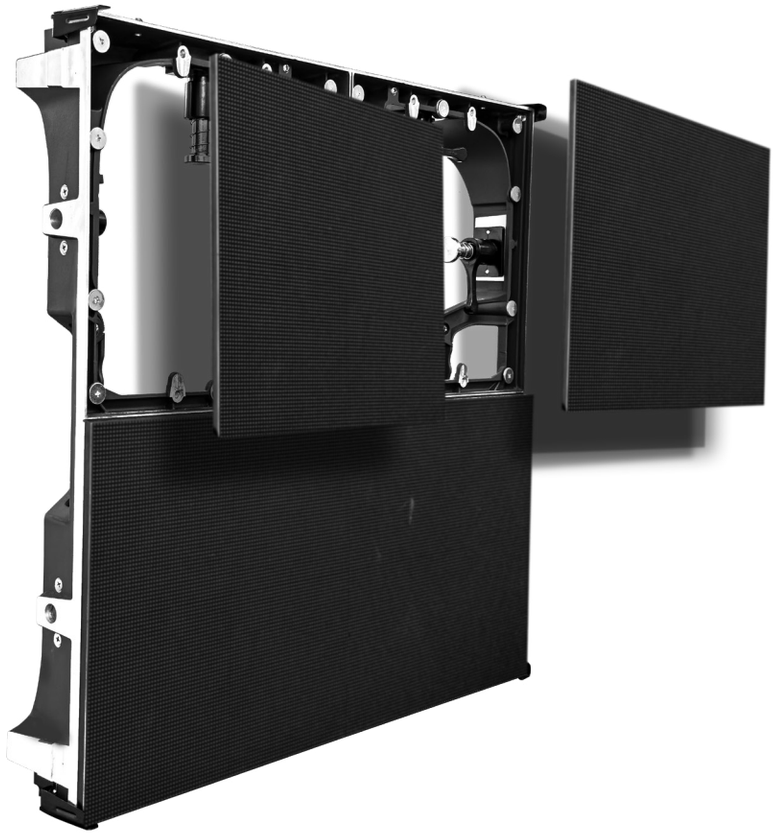

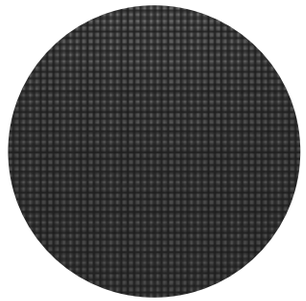

- 2.6mm



- 3.9mm

Considered anti-collision design

Adopts anti-collision design to avoid direct collision between LEDs and the ground, thereby effectively protecting the LEDs on the edge.

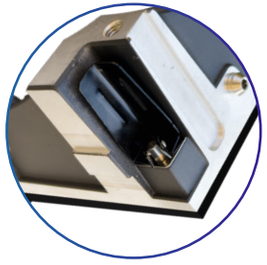

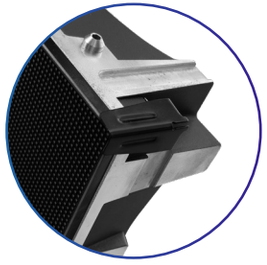

- Flip-over protective corner

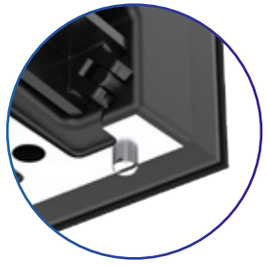

- Edge protrusion design

High-quality cable connectors

The G-pro series incorporates high-quality cable connectors for power and data transmission to achieve stable power and data signal transmission, and are equipped with high-quality cables to further reduce the failure rate.



- Indoor power box



Seetronic Power twist cable connectors for power supply



- Outdoor power box



Seetronic network cable connectors for data transmission

Durable locking system

The tightly connected horizontal side lock can effectively improve the flatness between panels. And the firmly connected vertical side lock further enhances the security of the hanging screen

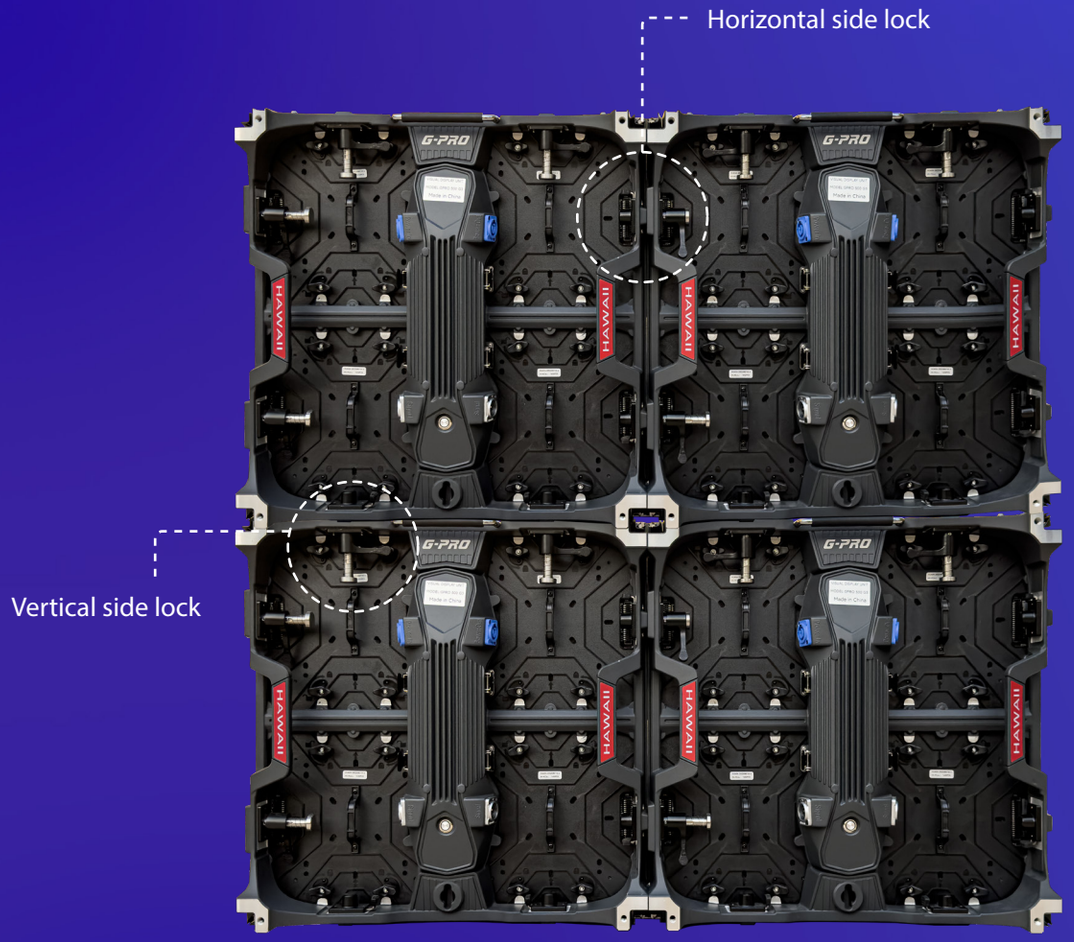

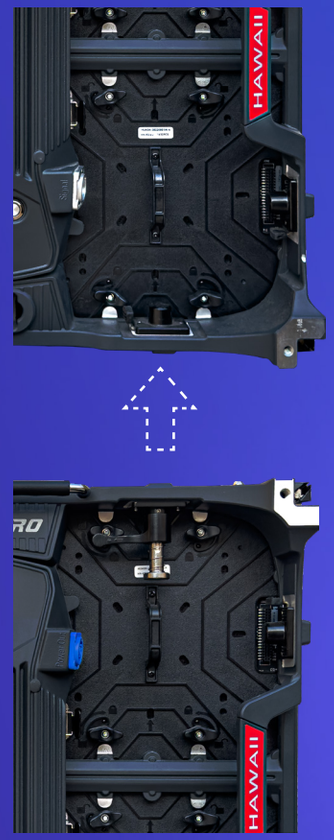

Fast one-man installation

The Glados series can be installed quickly by one person, thereby the installation and disassembly of the large screen can be easily completed in a short time.

Excellent curving capabilities

The NT series supports concave and convex connection to create various shapes and build a more creative stage



Curved Lock	-7.5° to +10° adjustable (2.5° per unit)

Back door unit easy maintenance

G-pro backdoor unit degned for easy mainatance. You can avoid all problems related to power, receiving crad, connectors and inside cable issues by replacing just a single unit.



- Replaceable Integrated Power & control unit



- Front & Rear Accessible door



- Same door unit can use in any pixels

Module easy maintenance

G-pro Module for easy mainatance. You can avoid all problems related to power, receiving crad, connectors and inside cable issues by replacing just a single unit.

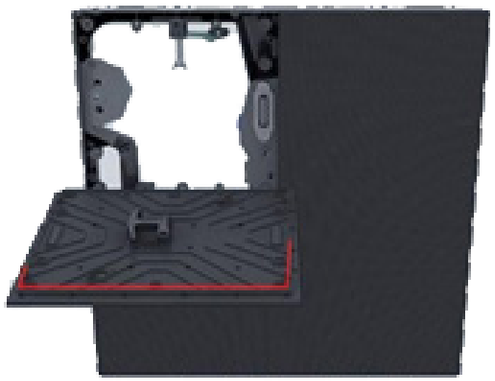

- High precision inset type modules



- Same module can use in any position

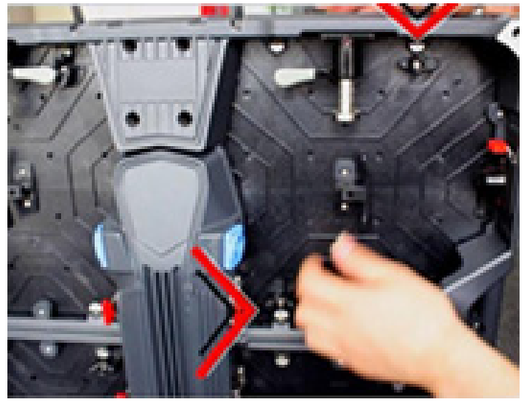

- Easy removable Module locks

Hanging and stacking installation

Hanging and stacking installation solutions are both available to easily cope with the diverse requirements of the site environment.

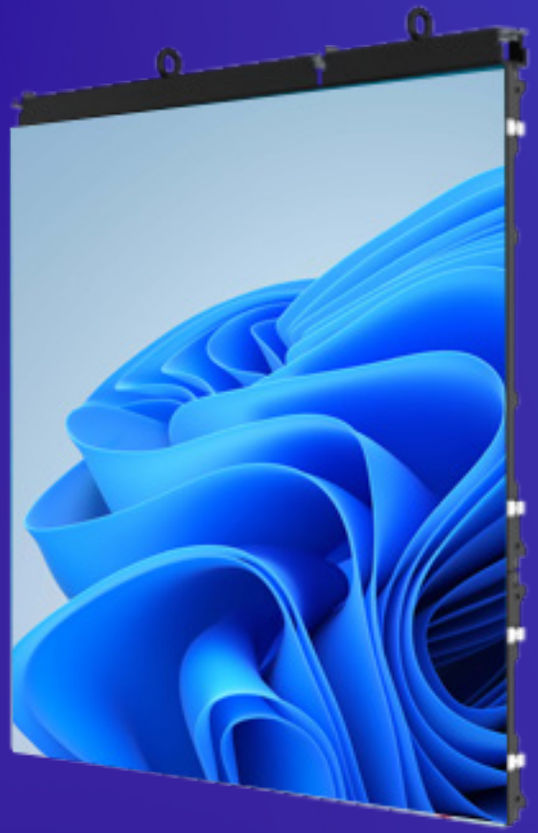

- Hanging installation with all-black hanging bars



- Stacking installation

Accessories

- 500mm Hanging bar for g-pro

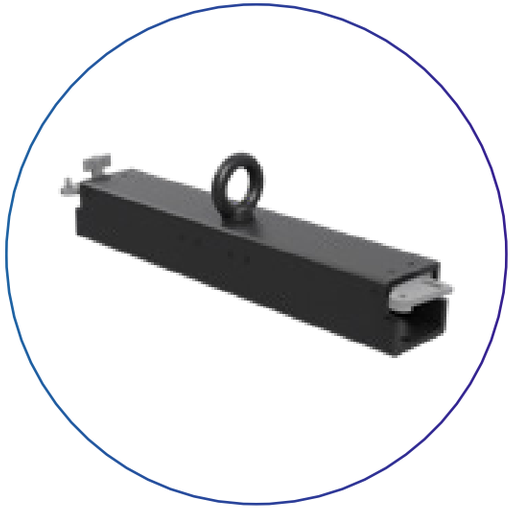

- 575mm Hanging bar for glados





- Stacking system



- Exclusive flight case

GLADOS PRO SERIES

Model Name	PRO-1.9IS	PRO-2.6IS	PRO-2.9IS	PRO-3.9IS	PRO-3.9OS	PRO-4.8OS
Operating Environment	Indoor	Indoor	Indoor	Indoor	Indoor/Outdoor	Indoor /Outdoor
Pixel Pitch (mm)	1.95	2.6	2.9	3.9	3.9	4.8
Cabinet Resolution	256 X 256	192 X 192	168 X 168	128 X 128	128 X 128	104 X 104
Cabinet Size (mm)	500 X 500	500 X 500	500 X 500	500 X 500	500 X 500	500 X 500
Cabinet Type	Aluminium Dicast Cabinet					
LED Encapsulation Make	Nationstar	Nationstar	Nationstar	Nationstar	Nationstar	Nationstar
LED Type	Four in One	SMD 1515	SMD 2020	SMD 2020	SMD 1921	SMD 1921
Brightness	700 nits	1200 nits	1200 nits	1200 nits	4000 nits	4000 nits
Driving IC	ICN2153	ICN2153	ICN2153	ICN2153	ICN2153	ICN2153
Scan	1/32	1/24	1/21	1/16	1/16	1/13
Service Access	Front/Rear	Front/Rear	Front/Rear	Front/Rear	Front/Rear	Front/Rear
Weight (kg)	6.7	8.2	8.2	8.2	8.2	8.2
Viewing Angle	160 /140	160 /120	160 /120	160 /120	160 /120	160 /120
Module Size	250 X 250	250 X 250	250 X 250	250 X 250	250 X 250	250 X 250
Minimum View Distance (m)	>=1.95	>=2.6	>=2.9	>=3.9	>=3.6	>=4.5
Refresh Rate (Hz)	>=3840	>=3840	>=3840	>=3840	>=3840	>=3840
Power Consumption	100/35	130/45	120/40	120/40	150/100	150/50
Ingresss Protection	IP30/IP45	IP30/IP45	IP30/IP45	IP30/IP45	IP65/IP45	IP65/IP45
MTBF (hours)	10,000	10,000	10,000	10,000	10,000	10,000
Life span (hours)	100000	100000	100000	100000	100000	100000
Certification	BIS	BIS	BIS	BIS	BIS	BIS
Preffered Applications:	Rental, Fixed Indoor & Outdoor, Vehicle Mounted Screen, Dancefloor					

G PRO
RENTAL LED CABINET

هواي تك تريدينغ اند سير فيسس ذ.م.م
HAWAII TECH TRADING & SERVICES W.L.L

Hawaii Tech Trading & Services C.R.No : 150517, Doha-Qatar.
www.hawaiiledscreen.com , sales@hawaiigcc.com
Tel : +974 - 66 762 390 , +974 - 50 168 884

BRANCHES

DUBAI
Hawaii Star Trading L.L.C
Al Nahda Street,
Al Hilal Bank Building,
Dubai - United Arab Emirates

+971 562056777

SHARJAH
Warehouse no 1 -
Industrial Area 13 - Sharjah -
United Arab Emirates

+971 562056777

OMAN
Muscat Sky Development
Almaha St, Boushar,
Muscat Sultanate Of Oman
CR Number: 1396023
P.O.Box:123 P.C:111

+968 22478888

MUMBAI
HAWAII Sign And LED LLP.
G/SH11, ANGOLIMALA CHS LID.,
S.G. BARVE MARG, OFF MOTHER
DAIRY ROAD, NEHRU NAGAR,
KURLA(E), MUMBAI,400024,

+91-9702551222

CHENNAI
29, Ground Floor, Veerasami
Street, Egmore High Rd, Egmore,
Tamil Nadu - 600008

+91-8589 980 123

HYDERABAD
First Floor, Shop No -111
Beside Lotus Hospital
The Down Town Mall
Lakadi Ka Pul Hyderabad

+91-8589 980 123

BENGALURU
OmShreen #32, 1222, 26th
Main Rd,9th Block, Jayanagar,
Bengaluru, Karnataka - 560069

+91-9207 304 222

CALICUT
Near Aster Mims Hospital
Bypass Road Mankave
Calicut ,Kerala

+91 - 9207 804 222

KOCHI
440/365 A2, Ground Floor,
Vattekunnamkara Muttar,
Edappally,Kochi, Kerala - 682024
+91-9207 311 222